National Aeronautics and Space Administration

Tough Transitions:

STS-1 Pre-Launch Accident

Leadership ViTS Meeting

October 2011

Terry Wilcutt

Chief, Safety and Mission Assurance

Wilson B. Harkins

Deputy Chief, Safety and Mission Assurance

This and previous presentations are archived at:
http://nsc.nasa.gov/SFCS

THE MISHAP

March 19 1981: As ground crews worked to prepare for Space Shuttle Columbia's maiden voyage, a group of technicians collapse inside Columbia's aft service compartment following a countdown demonstration test. Nitrogen exposure would claim three of the technicians' lives.

Countdown Demonstration Test

•A Countdown Demonstration Test (CDT), scheduled for March 19, 1981, would serve as a dry run for Space Shuttle Columbia's upcoming launch.

•The CDT would begin on March 17, 1981 and conclude on March 19, 1981.

•Engineers agreed that the crew's egress from the cockpit would mark the end of the test.

•Once the CDT was complete, controllers would open the launch pad for normal work.

Test Deviation

•A month before the CDT, engineers suspected a gaseous nitrogen (GN_2) leak in the aft service compartment.

•Systems engineers agreed to check for the leak during the CDT.

•The CDT included a GN_2 purge that would replace the air in the orbiter's aft compartment with gaseous nitrogen, but in order to check for the suspected nitrogen leak, the duration of the originally scheduled GN_2 purge had to be extended.

•Operators discussed and approved this deviation at a pre-task meeting, but the written deviation only included the steps, not the time required to do the extended purge. The box used to indicate an increased hazard level was marked "no."

•The deviation bypassed review by both NASA and contractor safety personnel.

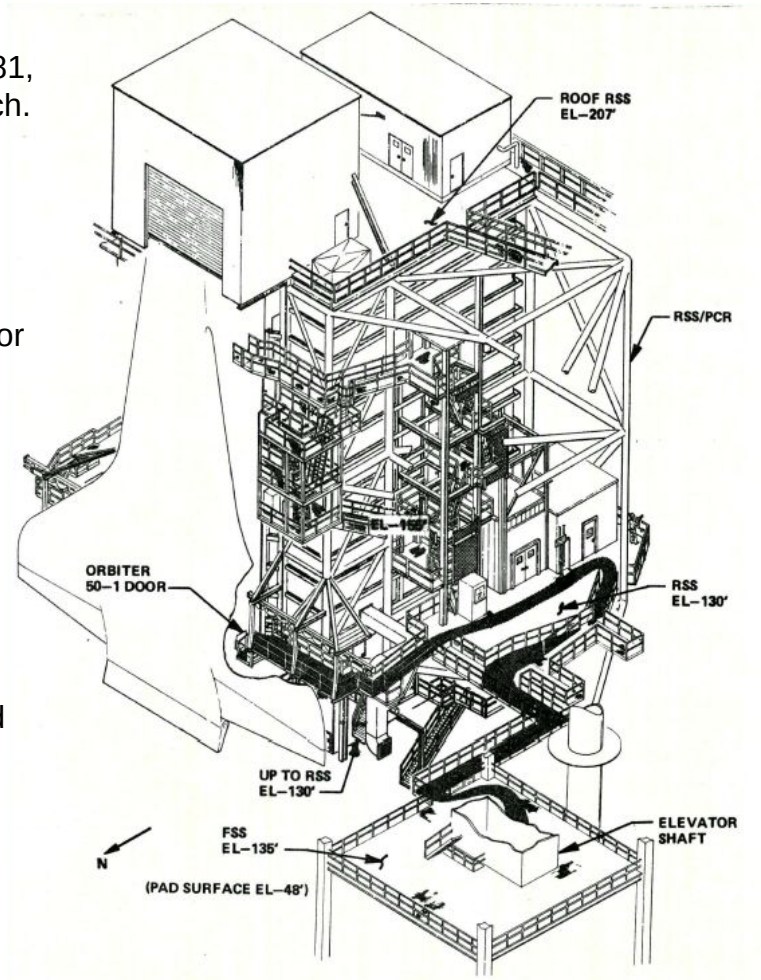

Path from elevator shaft to aft compartment

National Aeronautics and Space Administration

WHAT HAPPENED?

Access Controls Dropped

•When astronauts John Young and Bob Crippen exited the cockpit on March 19, 1981, controllers opened the pad area for normal work.

•The GN_2 purge continued in the orbiter aft compartment, maintaining a deadly atmosphere there.

•Only those conducting and controlling the leak check were aware of this, but they did not know that six technicians had begun riding a pad elevator to begin work in the aft compartment.

•The six technicians were unaware of the GN_2 hazard.

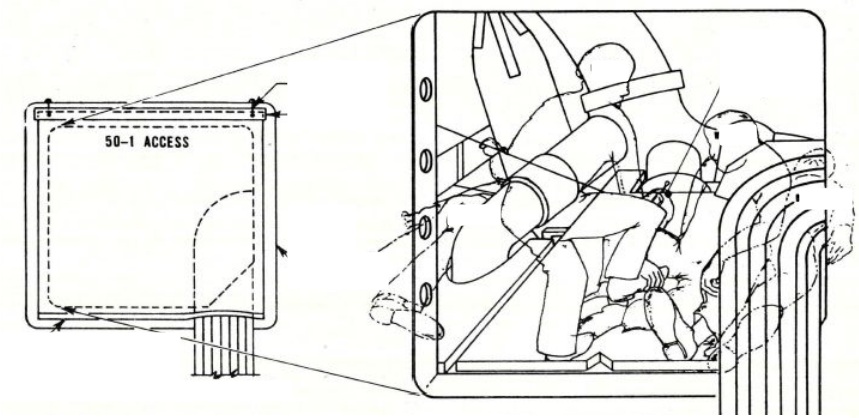

Closeout configuration of 50-1 Door Fallen technicians as seen through 50-1 door

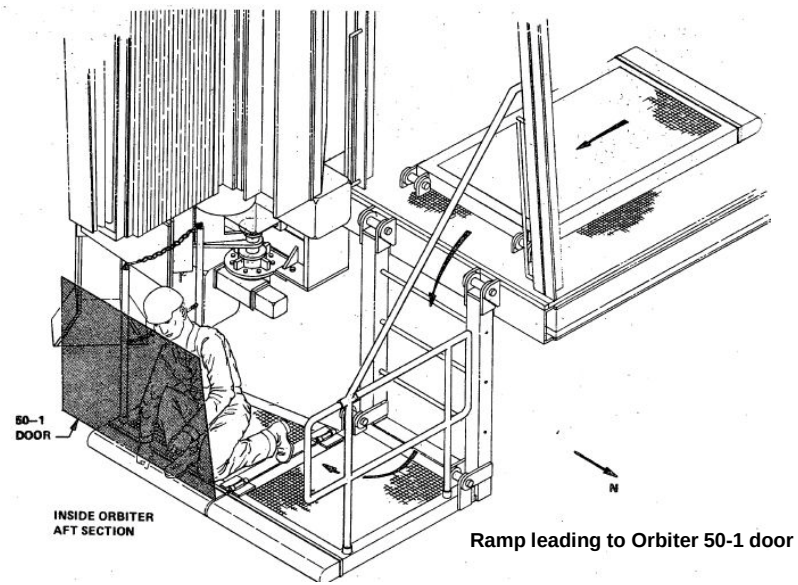

Ramp leading to Orbiter 50-1 door

GN_2 Exposure

•The GN_2 purge displaced oxygen in the aft compartment and created an atmosphere of pure nitrogen, which human senses cannot detect. Inhaling an oxygen-deficient atmosphere can result in unconsciousness without any warning symptoms after only a few breaths.

•When the first technicians entered the aft compartment, they passed out almost immediately.

•Technicians who attempted rescue also collapsed.

•Over the course of 15 minutes, controllers were alerted to the emergency in the aft compartment, and rescue teams were dispatched to the site.

•Three of the technicians eventually died as a result of the GN_2 exposure.

PROXIMATE CAUSE

After subsequent investigations, it became apparent that the injuries and deaths occurred because the technicians suffocated in a pure nitrogen atmosphere. Analysis found that the men were exposed to this hazard because the test conductors, the NASA Test Director (NTD), and other involved personnel lacked formal communication regarding the extended GN_2 purge. As a result of the miscommunication, directors dropped access controls prematurely.

UNDERLYING ISSUES

Unclear and Incomplete Procedures

•When operators agreed to perform the intrusion test, they formulated a deviation that delineated steps for carrying out the test, but it did not discuss procedures to close the launch pad for the hazardous GN_2 condition or to reopen it once the purge was complete.

•It also failed to specify that the GN_2 purge would be extended to accommodate the intrusion test, so controllers processed the activity as though it would take place during the planned GN_2 hazard period.

•Therefore, the change had no apparent impact on the CDT schedule or personnel hazards, and neither NASA nor contractor safety reviewers had to examine the deviation as written.

Communications Breakdowns

•A large number of late deviations (more than 500) inhibited adequate discussion and coordination of the GN_2 purge before the CDT took place.

•While the CDT was ongoing, briefings during shift changes made no mention of the purge extension, and at the end of the simulated takeoff, staffing levels in the Firing Room dropped significantly. As a result, operational discipline and control relaxed even while the hazardous GN_2 flowed through the orbiter aft compartment.

•Although the Firing Room crew knew about the ongoing flow, they were unaware of the technicians scheduled to work in the aft compartment as soon as the pad reopened.

Competing Operations Philosophies

•Firing Room staff and on-site technicians and engineers followed two different operating philosophies: Firing Room personnel attempted to impose control over integrated operations, but the on-site workforce sought to accomplish as much work as possible without the seeming encumbrance of Firing Room oversight.

•This autonomy led ground teams to make decisions and accomplish work without communicating with the Firing Room first. Therefore, on the morning of March 19, the technicians proceeded with their scheduled work without the Firing Room team's knowledge.

FOR FUTURE NASA MISSIONS

•The Official Accident Investigation Board found that many of the problems leading to the STS-1 accident paralleled the problems that led to the Apollo-1 tragedy: the pure oxygen atmosphere in the Apollo capsule was not identified as hazardous, contingency plans and equipment were incomplete, emergency teams were not present for the tests, and structural design made swift egress difficult.

> "It isn't reasonable to ask that we achieve perfection. What is reasonable is to ask that we never cease to aim for it."
> ***–Atul Gawande***

•Although fourteen years separated the two incidents, the STS-1 Accident Investigation Board determined that as of 1981, KSC failed to comply with a 1967 Congressional request to establish a solution to review operational checkout procedures in a timely manner.

•NASA has since taken several steps to correct these errors, but thirty years after STS-1, Centers and Programs continue to struggle to identify hazards similar to the ones that took the lives of the Rockwell International contractors in 1981.

Workers who have died in the line of duty at Cape Canaveral Air Force Station and Kennedy Space Center have their names engraved on the pylons of the Apollo Monument. Credit: Space Walk of Fame Foundation.

•History shows that inaugural missions are particularly susceptible to disaster: Apollo-1, *Soyuz*-1, STS-1, and SpaceShipTwo

•Especially early in a Program, issues such as schedule pressure, poor emergency response provisions, or poor communications undermine safety efforts.

•When approaching the first mission of a new Program, it is critical to uphold safety procedures while remaining vigilant against complacency and "tunnel vision."

•To truly aim for perfection, NASA must continue anticipating risks and questioning assumptions during design and operational processes to ensure that systemic safety issues within the Agency have been addressed.