National Aeronautics and Space Administration

SYSTEM FAILURE CASE STUDIES

DECEMBER 2011 VOLUME 5 ISSUE 12

Porthole to Failure

During the winter of 1982, the world's largest mobile offshore drilling unit, the Ocean Ranger, was drilling for oil off the Newfoundland coast. An intense storm approached. Since its 1976 launch, the big rig had weathered over 50 storms in two oceans; designed for 115 mph winds and 110-foot waves, it could handle this storm too. But close to 1:00 a.m. EST on February 15, 1982, the Ocean Ranger's crew sent a desperate mayday call. Nearby vessels arrived only an hour later to find rescue impossible on the freezing, tall waves. Of the Ocean Ranger's 84 crew members, only 22 were ever recovered. Autopsies confirmed that these victims died from hypothermia, and the 62 missing were presumed to have met a similar fate.

Background

Rig Configuration

The *Ocean Ranger* was owned by the Ocean Drilling and Exploration Company (ODECO) and leased to Mobil Oil at the time of sinking. At 400 ft. long, 260 ft. wide, and 300 ft. from keel to derrick top, its construction by Mitsubishi Heavy Industries was supervised by the American Bureau of Shipping and rated for "Unrestricted Ocean Operations." The *Ocean Ranger*'s semisubmersible design placed the drilling platform atop eight columns fixed to two parallel pontoons (Figure 1). During transport, the pontoons floated near the ocean surface while the unit powered itself to a drilling site. Upon arrival at the drill site, operators would set twelve anchors and pump ballast tanks inside the pontoons full of seawater, submerging the oil rig to the appropriate drilling depth (Figure 2). Unlike a ship, the *Ocean Ranger* was not intended to rise and fall with the ocean waves: the anchors were tensioned each up to 250,000 lbs to keep the rig practically pinned in place atop the oil wellhead on the bottom (Figure 3). Stability in geological location was crucial to drilling efficiency.

All chains and cables led upward, over each of the rig's four corner columns, into six-foot-square openings and downward to storage spaces called chain lockers. The columns' tops were normally over 80 feet above the ocean surface and remained open to weather. No cover of any type was supplied for these large openings.

Since stability in roll and pitch was as important as locational stability, the oil rig's two pontoons held tanks for seawater ballast as well as fresh water and fuel. Each pontoon held pumps used to transfer ballast forward or aft in a pontoon, via pneumatically powered valves that were electrically controlled by a crew member standing his 12-hour watch in the Ballast Control Room.

Ballast Control Room

Ocean Ranger had only two qualified men (one per 12-hour shift) to man the control room. The qualified watchstander would change trim upon request (adjusting how much of the rig floated above the surface) to support drilling operations, calculate changes in the rig's center of gravity, and respond to stability changes by pumping ballast forward or aft, onboard or overboard. These tasks were important not only during drilling activities, but also while replenishing supplies such as fresh water and fuel, since these actions could actually tilt the rig despite the large anchor forces. A "list" (tilt) of even 5 degrees posed major production and safety risks on the drilling platform. Yet neither man had any formal classroom training or testing required for qualification. Only two weeks' on-the-job-training in the control room alongside an experienced operator, responding to normal conditions and tasks, was considered necessary by the company to qualify.

Figure 1: The Ocean Ranger was the world's largest and most advanced drilling platform of its day.

The single ballast control room was located inside an inner column on the starboard (right) side of the rig. Since the ballast control

Mobile Offshore Drilling Unit Capsizes in Severe Storm; 84 Dead.

Proximate Cause:

- Ballast control console malfunctions, causes forward ballast tanks to open
- Uneven ballast causes rig to list and eventually capsize

Underlying Issues:

- Operator knowledge of system inadequate
- Insufficient lifesaving equipment
- Absence of written casualty control procedures

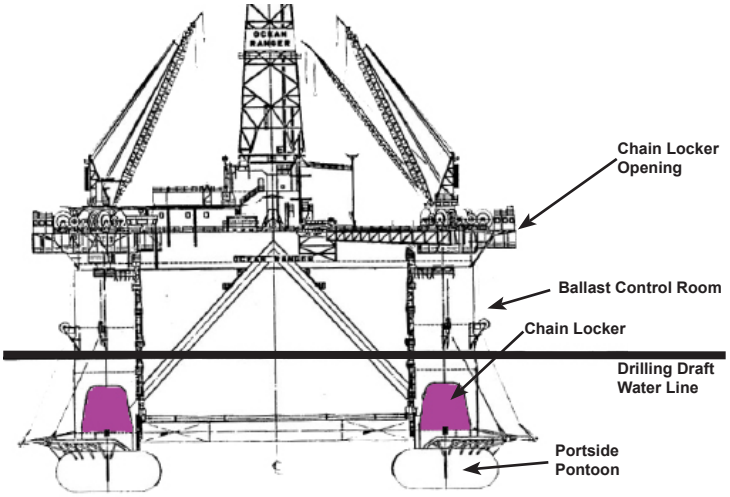

Figure 2: Ocean Ranger drilling platform and support structure

operator needed to observe current sea conditions, four circular glass portlights (windows) were provided. Each portlight had a steel cover or deadlight that could be fastened from inside to secure the portlight from wave damage in storm conditions.

The ballast control operator pushed lighted pushbutton switches in the control room to signal valves to operate and ballast pumps to direct ballast water as needed. The equipment layout was arranged in line diagrams on a 'mimic' type control board that showed the stability system. The buttons were mounted over schematic valve locations. The color of the light in a button indicated the position of its related valve—red for a closed valve and green for an open one. This electrically powered mimic board was the only way *Ocean Ranger*'s crew could view valve position. All ballast control room instruments and indicators were electric, except for two bubble inclinometers that displayed the list in pitch and roll up to 15 degrees.

If electric power to signal the valves was lost, their fail-safe design was to close (pneumatic pressure was used to power valve movement). A method to bypass the button switches had been used to test the system while the *Ocean Ranger* was under post-construction acceptance tests: shipyard tradesmen screwed a set of brass rods into sockets under the ballast control console to force down solenoid switches, sending compressed air to operate valves without electric power to the console. These rods were made only for test purposes, not for emergency use on board, so their use was never included in the *Ocean Ranger*'s operations manual. After sea trials were completed, however, the rods remained inside the console. Ballast control operators and the rig's electrician believed their function served to close an open valve during an electrical failure. Their system knowledge was incomplete. Their belief would play a pivotal role in the rig's final hours.

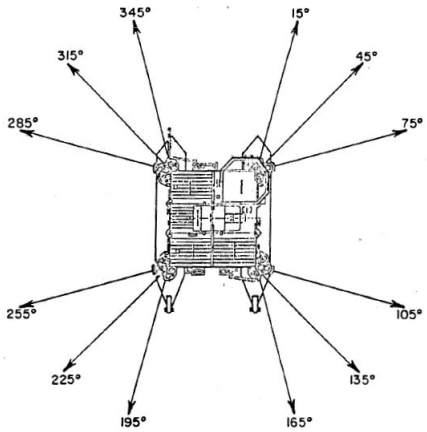

Figure 3: Top view showing the 12 anchors that steadied the oil rig over the wellhead.

Supply Ships

Two other mobile oil rigs—*SEDCO 706* and *Zapata Ugland*—were stationed only a few miles away from the *Ocean Ranger* as the big North Atlantic cyclone approached. The Canadian government required each oil rig to have a dedicated standby vessel stationed nearby in case of an emergency. These vessels supplied food, water, and fuel to their respective units. The *Seaforth Highlander* served as the *Ocean Ranger*'s standby vessel and stood off approximately five miles away from the *Ocean Ranger* in compliance with safety regulations meant to prevent the supply ship from running into the oil rig's anchor cables during bad weather.

What Happened

Control Room Flood

On February 14, 1982, the *Ocean Ranger* was battered by the strongest storm it would experience. The crew had prepared for high winds and heavy seas, but remained confident since the rig had withstood major storms. Their focus remained on drilling production until the platform motion exceeded 15 feet of 'heave' (vertical travel). Close to 6:45 p.m. EST, this heaving motion led the rig's senior officer (known as the Toolpusher), to order the crew to disconnect from the wellhead by shearing off the drill pipe—a difficult maneuver that had only been required on the *Ocean Ranger* once before. This was successfully done, protecting the well but not the rig from storm damage. The crew took whatever self-protective measures they recalled from past experience; their operations manual lacked detail on what to secure on the rig itself. The Ballast Control Room had never been damaged, and no unusual measures were taken to protect it. Even in calm conditions, it stood less than thirty feet above the surface.

At approximately 7:45 p.m., a large wave impacted the *Ocean Ranger* and shattered windows in the Ballast Control Room. Salt water spewed into the room, soaking the ballast control console. Power to the control panel may have been interrupted, either short-circuited by water or secured by the crew to prevent shock. Evidence for this sequence comes from *Zapata Ugland* and *SEDCO 706* crew members monitoring radio transmissions who could hear these transmissions, which later helped investigators learn the sequence of events.

After receiving reports of the broken portlight, a cleanup crew sent to assist the ballast control operator observed indicator lights on the mimic board flashing from red to green and back, leading them to believe that the valves in the portside pontoon were opening and closing on their own. Such a circumstance would allow the portside tanks to fill with seawater and result in a dangerous list (tilt). Removing power via the electrical cutoff switch would automatically close the pontoon valves. However, the team had to summon the rig's electrician to find the switch. It was nearly 9:00 p.m. before they cut off power to the console and the valves.

Power Restoration

With power to the console cut off and the pontoon valves closed, it is likely the rig could have weathered the storm. But close to midnight, for unknown reasons, the men on the *Ocean Ranger* decided to restore power to the ballast console. They may have been attempting to raise the rig to a higher draft level, or they may simply have wanted to test the system after having cleaned the salt from the mimic board's switches. After the team restored the power, short circuits or inadvertent operator commands caused valves in the bow to open. Water flooded the forward ballast tanks, and slowly, the rig began to list forward, toward the bow.

Radio transmissions overheard on nearby rigs and vessels indicated that the ballast control operator made several attempts to cut off and restore power in an effort to prevent the rig from listing even further. However, the valves took half a minute to close, so each of these attempts allowed more ballast water to flow forward. While the inclinometer displayed an increasing list to the Toolpusher, he did not request aid from the *Seaforth Highlander*. Presumably, he still considered the situation controllable.

Correcting the problem required moving water out of the bow tanks, but using the pumps positioned aft to pump water all the way aft was no longer possible: the height required to pump the water exceeded the discharge capacity. There was still another option—pump water from the bow to amidships tanks, and level the rig enough to further pump water aft. But neither the rig master (who understood stability theory but not the onboard system) nor the ballast control operator apparently knew how to do this. Someone in the control room saw the brass actuating rods as the only remaining option for controlling list. Personnel shut down the power once more and began threading the rods into the console. But the brass rods could only direct air pressure to open valves—not close them, and without electric power to the console's indicators, the crew could only guess at what was actually happening in the ballast tanks below.

Figure 3: The Ocean Ranger drilled in the Hibernia Field, not far from the Newfoundland coast.

Chain Locker Flood

As crew members threaded rods into the console (18 actuating rods in all), they inadvertently opened more pontoon valves. As seawater poured into the ballast tanks, the forward list brought the open tops of the rig's corner columns within range of the highest waves. As water engulfed the chain lockers, the rig passed the point of recovery.

Without sensors or alarms to divert crew member attention to the chain lockers, the men persisted in their attempts to manipulate ballast controls. Without alternative indicators of what the pontoon valves were doing, the crew had to be confused as to why the list increased. But they finally realized their efforts would not work. At approximately 1:00 a.m. on February 15, the *Ocean Ranger* began sending mayday signals. The *Seaforth Highlander* steamed toward *Ocean Ranger*, but because of the treacherous weather conditions, it would be more than an hour before she would arrive.

Evacuation

At 1:30 a.m. the *Ocean Ranger*'s radio man sent his final transmission: the crew was boarding the lifeboats. Investigators later determined that as the lifeboats descended, violent winds threw them against the side of the oil rig, crushing some lifeboat hulls before they ever touched the water. Many crew members likely jumped or were thrown into the frigid ocean, and without survival suits to fend off hypothermia, the men could survive for only minutes.

The *Seaforth Highlander* reached the *Ocean Ranger* and an emergency flare lit the night. The ship expertly came alongside and upwind of one last lifeboat that still held survivors. But after the crew secured lines to the lifeboat, a huge swell capsized the boat. The men inside could not be recovered, though the *Highlander* tried everything. None of the 84-man *Ocean Ranger* crew survived. The rig capsized and disappeared from radar at approximately 3:10 a.m. Only 22 victims were recovered after the storm abated.

Proximate Cause

The U.S. Coast Guard investigation cited failure of the ballast control room portlight as the proximate cause of the tragedy. This failure led to power loss and uncertainty as to the configuration and position of ballast valves.

Based on available evidence, investigators could not determine the exact events that took place after the crew restored power to the ballast control console. Three scenarios were possible: a) the forward list occurred entirely because of an electrical malfunction in the ballast control panel (i.e. short circuits in the control panel admitted water to the forward ballast tanks); b) the forward list occurred entirely because of a personnel error (i.e. crew members assumed a control panel malfunction when a malfunction did not actually occur, and in their attempts to rectify the perceived situation, they inadvertently directed water into the forward ballast tanks); or c) the forward list occurred because of a combination of an electrical malfunction and a personnel error.

Insufficient Experience

Despite the importance of the ballast control operator position, no formal training program for this post existed. Officials expected crew members interested in the position to use their off-duty hours to shadow the current operator. Then, if a new operator was needed, senior rig managers chose a candidate to begin on-the-job training based on this initiative. ODECO had a policy requiring employees to have 80 weeks of general offshore experience before on-the-job training for the ballast control operator position could begin, but records showed that one ballast control operator at the time of the accident had begun his training after only 40 weeks of offshore experience, and the other had begun after just 12 weeks.

Moreover, experience on other drilling vessels was considered sufficient preparation for joining the crew. Regardless of crew member role or position, ODECO did not provide training for procedures or systems specific to the *Ocean Ranger*.

After the accident, the U.S. Coast Guard interviewed ODECO staff engineers about different methods of ballast control. These engineers described the midships pumping technique that would have allowed the operator to reduce the list and bring the rig back to an upright position after water flooded the forward ballast tanks. This maneuver was not listed in the ballast control operations manual, so controllers could only have learned technique by studying the onboard system and applying stability theory. The Master knew the theory but not the system; the operators knew a little about the system but not stability theory. The Coast Guard investigation concluded that lacking sufficient system knowledge, they failed to correct the list while the system still allowed such correction.

Absence of Written Casualty Control Procedures

Ballast control console malfunctions could have been addressed if the crew had possessed a detailed casualty control procedure. Per Coast Guard investigators, use of such a procedure would also have

prevented insertion of brass rods to manually operate the ballast control system. The rods would not have remained on board had their original purpose been discovered.

The *Ocean Ranger* did have an Emergency Procedures Manual that included steps for evacuation, but the manual did not discuss lead times necessary to be rescued. According to the U.S. Coast Guard, the crew may not have appreciated the amount of lead time—2 hours for a helicopter and 40 minutes for the standby vessel—needed to conduct rescue because of this omission.

The *Ocean Ranger* also had a Booklet of Operating Conditions, but the document was deemed by the investigation to be of little use to onboard personnel. This operations manual was difficult to read; the format did not reference important subjects. Former crew members testified that the manual had been produced with the primary goal of fulfilling a regulatory requirement. Per the investigation, documents ignoring user needs and capabilities defeat regulatory intent and possess diminished value. If ODECO's naval architects and marine engineers had consulted with rig-experienced crews when developing the manual, they could have created a more usable document.

Design Flaws

Semisubmersible oil rigs were still evolving in the early 1980's, and at the time, the *Ocean Ranger* was considered the most advanced offshore drilling unit of its day. Unfortunately, flaws in the design—particularly of the chain lockers and of the ballast control console—played key roles in the disaster because these components were designed not for failure, but for ideal conditions.

Ideal conditions for the chain lockers meant that a significant distance would separate the locker openings from the ocean surface when the rig had an even keel. Unfortunately, even the unit's twelve anchors could not keep the *Ocean Ranger* from pitching and tossing amid the violent waves of a major cyclone. Taking this scenario into account, designers could have prevented this failure mode by including gates or covers for the chain locker openings.

Ideal conditions for the ballast control room meant the area would never be exposed to water. But the presence of the breakable portlights meant that a risk of water ingress existed. Therefore, designing against failure meant designing against the possibility that the ballast control console could be damaged by seawater. Had the console been insulated or otherwise waterproofed, the damage it undertook might not have occurred, and the confusion concerning the valve status might not have ensued.

Finally, the control console served as the sole interface through which controllers could ascertain which valves were open and which were closed. If designers had included a redundant or more robust means of indicating valve position, the crew could have responded better.

Aftermath

As a result of the *Ocean Ranger* catastrophe, Canadian federal and provincial governments enacted major legislative and regulatory changes to establish stricter safety guidelines. These measures required drilling platforms off the Canadian coast to formulate emergency preparedness plans, mark rig interiors with escape routes, and provide survival suits for all onboard. All offshore personnel are now required to receive basic survival training including fire fighting, lifeboat operation, and helicopter ditching.

For Future NASA Missions

Since 2009, NASA has adopted all five aspects of so-called 'safety culture' espoused by Dr. James Reason: Reporting Culture (we report our concerns without fear); Just Culture (there's a sense of fairness); Flexible Culture (we change to meet new demands); Learning Culture (we learn from failures and mistakes); and Engaged Culture (everyone does their part). From *Ocean Ranger* we can learn from this related shortfall: the company operating the rig for hire did not demonstrate a learning culture in that little formal evidence existed to convey how the stability system was designed and operated, or how lifesaving gear should be used in actual extreme conditions.

If culture describes our long-term shared behavior, values and goals, then we have a history of both making and learning from our own and others' failures. Each day brings new opportunity to verify and validate our engineering and loss-prevention practice—not just in reference to the norm or ideal—but especially out at the 'design limits' we can face in terms of technical risk to people, property and mission. Change swirls around us now; what are its boundaries? Do we behave as our five safety cultural norms prescribe?

Questions for Discussion

- **How do you ensure that operators truly possess a thorough understanding of system design and operation?**
- **What are the best methods to test the efficacy of your emergency protocols?**
- **Are there areas in your project where fulfilling regulatory requirements has constituted the primary goal? If so, how do those areas affect the system's safety?**

References

"25 years later, *Ocean Ranger* tragedy deeply felt." CBC News, 2007. < http://www.cbc.ca/news/canada/newfoundland-labrador/story/2007/02/15/ranger-25.html>

Chiles, James R. Inviting Disaster: Lessons from the Edge of Technology. Collins Business: New York, 2002.

Kirby, Mark. "Hibernia Oil Field." Online Image. Nov 2010. Memorial University of Newfoundland. < http://www.heritage.nf.ca/society/ocean_ranger.html>.

The *Ocean Ranger* Disaster. Dir. Christopher Rowley. CineNova Productions, 2002.

U.S. Coast Guard Marine Board of Investigation. MODU *Ocean Ranger*, Capsizing and Sinking in the Atlantic Ocean on February 15, 1982 with Multiple Loss of Life. United States Coast Guard. Washington D.C., 1983.

"The Legacy of the *Ocean Ranger*: A Safer Offshore." Newfoundland & Labrador Oil & Gas Industries Association. < http://www.noianet.com/archivednoianewsitem.aspx?nid=109>

SYSTEM FAILURE CASE STUDIES

NSC

NASA SAFETY CENTER

Responsible NASA Official: Steve Lilley Developed by: ARES Corporation
steve.k.lilley@nasa.gov

Thanks to Mark George for his insightful peer review.

This is an internal NASA safety awareness training document based on information available in the public domain. The findings, proximate causes, and contributing factors identified in this case study do not necessarily represent those of the Agency. Sections of this case study were derived from multiple sources listed under References. Any misrepresentation or improper use of source material is unintentional.

Visit http://pbma.nasa.gov to read this and other case studies online or to subscribe to the Monthly Safety e-Message.