National Aeronautics and Space Administration

SYSTEM FAILURE CASE STUDIES

JULY 2010 VOLUME 4 ISSUE 7

Deadly Efficiency

On May 25, 1979, American Airlines Flight 191 suffered catastrophic damage when the left engine tore away from the aircraft during takeoff and careened onto the tarmac below, bringing part of the wing and dozens of hydraulic and electrical lines with it. Seconds later, the McDonnell-Douglas DC-10 crashed near a trailer park less than a mile from the runway. Along with 2 people on the ground, all 271 passengers and crew lost their lives in what is considered the deadliest accident in the history of American commercial aviation.

BACKGROUND

Engine-Pylon Assembly

The McDonnell-Douglas DC-10 aircraft was powered by three General Electric engines, one on each wing and one on the tail. The wing-mounted engines were coupled to pylons that connected to the wings by means of three spherical bearings. Two of these joints were located in the pylon's forward bulkhead. The third was positioned in the rear bulkhead where it connected underneath the wing (Figure 2). The wing-mounted engines could not be seen from the cockpit.

Slat-Locking Mechanism

During takeoff, the leading-edge slats of the airplane wings must be locked in an extended position to generate proper lift; failure to generate lift is known as a stall. In the DC-10, a hydraulic cylinder located behind the slats acts as the locking mechanism: the incompressible fluid in the hydraulic system resists the pressure of the oncoming airflow, forcing the slats to remain in the extended configuration. With the slats extended, the wing's stall speed was 124 knots. The stall speed increased to approximately 160 knots when the slats were retracted.

WHAT HAPPENED?

Spherical Bearing Replacement

In 1975 and again in 1978, McDonnell-Douglas issued service bulletins that called for the replacement of the bearings at the forward and aft bulkheads of the pylon (Figure 2). In replacing the bearings, McDonnell-Douglas specified that the engine be removed from the pylon before the pylon was removed from the wing. Dismantling the engine-pylon assembly required 79 disconnects of hydraulic and electrical lines. American Airlines devised a new procedure that would reduce that number to 27 by removing the engine and pylon from the wing as a single unit. This would also eliminate 200 man-hours from the process. American Airlines contacted McDonnell-Douglas about this procedure, but McDonnell Douglas would not endorse the American Airlines method because they considered remating the combined engine-pylon assembly to the wing attach points too risky. FAA regulations did not require any airlines to obtain manufacturer approval for procedural changes, so American Airlines continued with their own method despite the manufacturer's advice against it.

Figure 1: American Airlines Flight 191 crashes only seconds after takeoff from Chicago O'Hare Airport

On July 28, 1978, American Airlines engineers issued an Engineering Change Order (ECO) that set forth the guidelines for changing the bearings. The ECO stated that a forklift with an attached engine stand must be positioned directly beneath

American Airlines Flight 191 Crashes, Killing 273

Proximate Causes:

- Undetected fracture weakened engine attach point
- Engine physically separated from aircraft
- Hydraulic fluid loss forced retraction of wing slats, resulting in a stall
- Loss of electrical power disabled stall warning system

Underlying Issues:

- Deviation from recommended maintenance processes
- Insufficient maintenance regulations
- Industry-wide shortcomings in reporting regulations
- Design flaws and inadequate redundancy

the center of gravity of the engine-pylon assembly so that the pylon attach points would not have to support any of the unit's weight. The ECO also sequenced the removal of the forward connections prior to the aft connections.

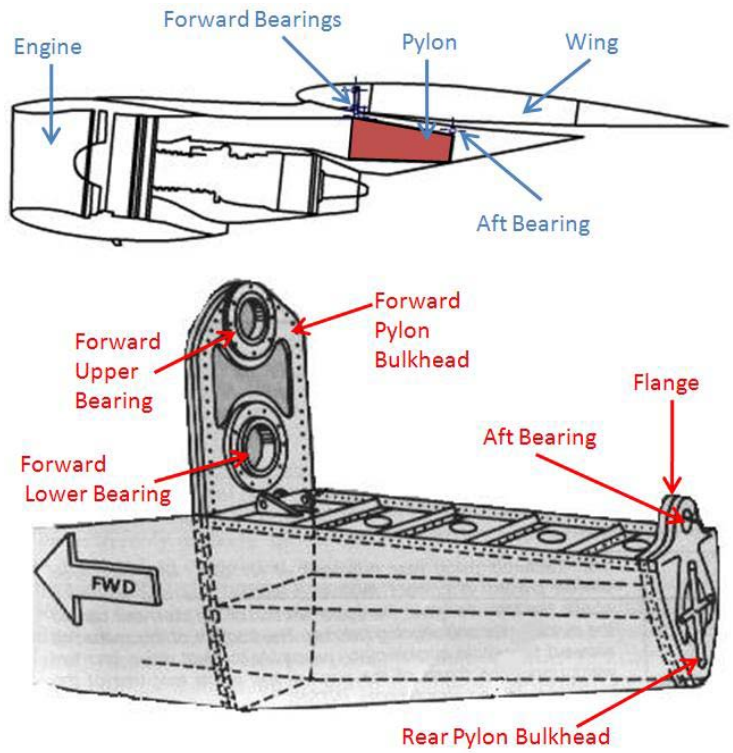

Figure 2: Forward and Aft wing attach points. The pylon is highlighted in red and magnified in gray.

On March 29-30, 1979, DC-10 #N110AA was upgraded per the new American Airlines procedure in Tulsa, OK. The midnight shift encountered great difficulty in following the specific sequence the ECO outlined, so they disassembled the hardware in reverse order, removing the aft bearing prior to the forward bearings. When the day shift arrived the next morning, they noticed the upper portion of the pylon's rear bulkhead resting against the wing; such a configuration would have required a 0.6 inch vertical movement of the aft bulkhead. Workers did not report this finding to their supervisors. Rather, they attempted to proceed with the replacement, but could not detach the forward bearings because the engine stand was misaligned. They shifted the forklift toward the front of the engine and then removed the forward attaching hardware. During this process, the forklift ran out of fuel and for a period of time supported the unit unpowered, possibly causing an imperceptible drift-down of the lifting forks and their load.

Although it is certain the pylon was damaged during the bearing-replacement process, the exact point in the procedure where the fracture occurred is unclear. Several possibilities for the damage exist, including initial misalignment of the forklift, drift-down of the forklift, or operator error. Given the assembly remained attached at the forward bulkhead, all of these situations could have produced a torque that would cause the aft bulkhead to contact the wing. The forces imposed by this contact would therefore result in a crack that could propagate on subsequent flights.

Engine Separation

On May 25, 1979, DC-10 #N110AA, now operating as American Airlines Flight 191, began its takeoff run at 3:02 pm CST. As the aircraft neared the end of the runway, the left engine and pylon assembly ripped away, tumbled over the wing, and hurtled to the tarmac, taking a three-foot section of the wing's leading edge with it. The separation shut down the associated hydraulic system and cut off power to the captain's flight director instruments, stall warning system, and slat disagreement warning light. As hydraulic fluid gushed from the lesion, the force of the oncoming air met no resistance, causing the left wing leading-edge slats to retract.

Asymmetric Stall and Loss of Control

The plane became airborne in a wings-level orientation, but the retraction of the left slats caused that wing to stall. With the right wing generating full lift and the left wing generating none at all, the aircraft entered a roll toward the left. The flight crew, cognizant of the engine failure but unaware of the slat retraction, decreased the airspeed from 165 to 153 knots, the prescribed speed for engine failure upon takeoff. Meanwhile, they attempted to compensate for the left bank by adjusting the right-wing rudder and ailerons. Their efforts were to no avail: 35 seconds later, at an altitude of approximately 300 feet, the nose pitched downward and the airplane plummeted to the ground, exploding upon impact in an open field. All 271 people on board the aircraft and 2 more on the ground perished.

Proximate Cause

Investigation teams from the National Transportation Safety Board (NTSB) discovered a horizontal 10-inch fracture on the flange of the left pylon's rear bulkhead. The fracture was found to be the result of overstress initiated by a bending force near the center of the flange. During takeoff, the aft end of the pylon is forced upward. However, the fractured bulkhead, now incapable of sustaining such a load, tore loose and the whole assembly separated from the aircraft, leading to the simultaneous occurrence of three events: the retraction of the left wing leading-edge slats, the loss of the slat disagreement warning system, and the loss of the stall warning system. Had any of these events happened alone, the flight crew may have been able to cope with the situation, but their synchronized failure created a condition that precluded control of the aircraft.

Underlying Issues

Inadequate Engineering Change Order

The engineers who designed the ECO overlooked many factors when they implemented the change, but the most glaring omission was a formal fault analysis regarding the effect the forklift would have on the unit in the event of a malfunction or a human error. In this incident, the most conspicuous application is the possible drift-down of the forklift while it supported the unit's weight without power. Post-accident tests showed that an unpowered forklift carrying an engine-pylon assembly would drift down up to 1

inch in a half-hour. The tests further demonstrated that movement of 0.4 inches or less would produce a 7 inch fracture on the pylon's bulkhead.

Engineers also failed to evaluate the consequences of improper placement of the lifting forks and thus the ECO did not emphasize the necessity of precision in forklift positioning. Furthermore, the operators received scarce training for the particular task of manipulating a forklift bearing a 13,477 lb load with extreme accuracy. The forklift operators were guided only with hand and voice signals, as they had no other way of determining whether or not the forks were properly positioned. These oversights led the NTSB to conclude that the ECO was not thoroughly evaluated, and thus engineers remained unaware of the risks their new process imposed.

Insufficient Maintenance Regulations

American Airlines did not mandate maintenance personnel to follow the exact sequence of the procedures outlined in the ECO, nor did they require their employees to formally report deviations from the recommended progression. If either or both of these directives had been established, maintenance engineers may have been alerted to the unforeseen difficulties and been forced to re-evaluate the ECO.

The difficulties mechanics encountered may also have been discovered if supervisory personnel had properly monitored the procedure. Engineering department members were present only when observing the prototype procedure on previous aircraft, and even then, they witnessed only the vertical movement of the assembly as it rested on the forklift. They did not see the removal of attaching hardware between the wing and pylon, and more importantly, they did not see the aft bulkhead resting against the wing. Had they observed this occurrence, they may have recognized the unbalanced forces at work and prompted an inspection of the pylon.

American Airlines did not require critical structures to be inspected both pre- and post-maintenance, and the quality assurance team did not routinely check processes in a step-by-step fashion. If they had included these points in their maintenance regulations, and if they had established better supervisory and reporting procedures, they may have discovered the fracture.

Industry-wide Reporting Deficiencies

Continental Airlines performed an identical procedure to replace the spherical bearings on its DC-10's and in December of 1978, they discovered damage on the bulkhead of one of its pylons. Continental conducted a perfunctory investigation and attributed the damage to maintenance errors. They contacted McDonnell-Douglas for approval on a repair design, and the incident was forgotten. Then in February of 1979, Continental workers again noticed a crack on a second bulkhead in the same location and approximately the same size as the first. They again reported it to the manufacturer as a maintenance error, and still no extensive evaluation to determine the damage source took place.

These incidents point to vague standards in airline reporting requirements during maintenance procedures. The FAA had established guidelines for reporting major repairs to specific structures, but the circumstances that constituted those criteria were open to interpretation. Left to its own discretion, Continental Airlines classified the bulkhead damage and subsequent repair as minor despite its repeat occurrence, and chose not to report the incident to the FAA. McDonnell-Douglas, upon receiving notification of nearly identical bulkhead damage, simply accepted the maintenance error justification. By agreeing with Continental's evaluation, McDonnell-Douglas missed an opportunity to discover procedural flaws and disseminate that information to other airlines and manufacturers.

Design Flaws

The DC-10 complied with the rules of certification in place as of 1965. The pylons, in particular, were designed to satisfy current aviation and damage-tolerance requirements. What the designers did not consider was the pylons' vulnerability to maintenance damage. This was a severe oversight because pylons traditionally required replacement on a regular basis, and their design afforded only tiny clearances at the pylon-wing attach points, making detachment and reinstallation difficult. Furthermore, while the forward bulkhead contained two attach points, the aft bulkhead had only one. Designing two aft bearings on the rear bulkhead instead of just one may have forestalled the single point failure location.

The pylon design, however, was not the only flaw. Hydraulic system #1 provided the sole locking mechanism for the leading-edge slats on the left wing. Despite the fact that a mechanical locking device was standard on other aircraft, McDonnell-Douglas did not include this feature on the DC-10 because either wing demonstrated sufficient ability to compensate for the other if the slats were positioned asymmetrically. Engineers never considered the possibility of physical detachment of the pylon and subsequent loss of hydraulic fluid during design and testing reviews, and the mechanical locking device was summarily excluded.

Although the hydraulic system #1 and electrical generator #1 were wired for backup through engines #2 and #3 in the event of engine failure, the designers made no provisions for the situation of physical engine loss. The failure of the stall warning system was a direct result of this oversight. This was critical because the engine was not visible from the cockpit, and the flight crew had no other way of knowing that a stall was occurring. The DC-10 was equipped with one stall-warning system for each wing. When the stall warning computer detected a stall in its respective wing, it would send a signal to the stick shaker motor to vibrate the captain's control yoke. The problem with this design is that the left and right systems lacked crossover information – the right system could not detect a stall in the left wing and vice versa. Furthermore, even if crossover existed, the two systems drove a single motor, and loss of power to that motor prevented it from shaking the control yoke. Post-accident simulation tests

showed that if the pilot had been aware of the stall situation, he may have been able to attain airspeeds in excess of what the flight manual prescribed for his apparent situation, overcome the stall, and execute an emergency landing. A design change called for by the FAA allowed crossover between the two stall warning systems so that the stick shaker could be actuated either by the left or the right computer. Furthermore, NTSB required additional stick shaker motors to be built into the stall warning systems of all DC-10's.

Aftermath

Post-accident investigation revealed that across the industry, 76 engine-pylon units were removed using a forklift. Of these, 9 were found to have sustained overload cracks. The FAA fined American Airlines $500,000 and Continental Airlines $100,000 for using the forklift trucks. On June 6, 1979, the FAA administrator issued an emergency order of suspension, grounding all DC-10's until they were determined to meet safety criteria and were eligible for recertification.

Figure 3: Responders approach the wreckage of American Airlines Flight 191.

For Future NASA Missions

American Airlines and Continental Airlines devised an alternate procedure in the interests of safety (reduction of wire disconnects) and efficiency (reduction of man-hours). However, in developing the new maintenance system, engineers failed to assess many crucial aspects concerning the procedure's adequacy. While continued innovation of safer, more efficient, and more practical processes is paramount to success, even more critical is the assurance that these new procedures do not introduce additional risks. Step-by-step evaluation, strict reviews, and thorough monitoring are essential to the success of any project.

In an age where countless standards and certifications have already been established due to lessons learned from our past, it remains crucial to think beyond the current safety requirements, particularly when exploring new frontiers where new environments present unforeseen risks. The DC-10 met all regulations in place at the time, but critical components failed as a result of circumstances unaccounted for by the standards of the day. During the course of its investigation, the NTSB discovered that the probability of uncommanded slat retraction during takeoff "ranged from one in one hundred million to two chances in a billion per flight." When designers build in time for operators to compensate for an unlikely failure ("graceful failure"), the odds of survival increase.

Questions for Discussion

- Have you deviated from standard procedures in the interest of safety or efficiency?
- What steps have you taken to ensure that your procedures do not introduce new hazards?
- Have you formulated contingency plans for cascading or compound failures?
- Have you recently evaluated the quality of your inspection processes and maintenance procedures?

Though designers and engineers strive to be careful in their work, history has shown that even the seemingly outstanding designs may suffer failure. In the unforgiving environment of space, risk assumptions will sometimes be flawed and unanticipated conditions will sometimes be encountered. NASA possesses a wealth of knowledge accumulated over decades of missions that have met countless numbers of such situations. In an era where fledgling aerospace companies are beginning to appear in the commercial sector, NASA should continue to share success and failure information toward the purpose of mission safety.

References:

"273 die in crash at O'Hare." Online image. Chicagonow. 15 April 2010.< http://www.chicagonow.com/blogs/photos/ 2009/10/273-die-in-crash-at-ohare---may-25-1979.html>.

"Diagram showing wing fitting." Online image. Airdisaster.Com. 12 April 2010. <http://www.airdisaster.com/ investigations/ aacrash.shtml>.

"FAA diagram of the DC-10 engine." Nationmaster. 15 April 2010. <http: //www.nationmaster.com/encyclopedia/ American- Airlines-Flight-191>.

"First responders survey 191 crash site." Online image. 25 May 1979. Nationmaster. 15 April 2010. <http:// ww.nationmaster.com/ encyclopedia/American-Airlines-Flight-191>.

Kilroy, Chris. "Special Report: American Airlines Flight 191." Airdisaster.Com 12 April 2010 <http:// www.airdisaster.com/special/special-aa191.shtml >.

National Transportation Safety Board. Aircraft Accident Report: American Airlines, Inc. DC-10-10, N110AA. United States Government, 1979.

SYSTEM FAILURE CASE STUDIES

NASA SAFETY CENTER

Executive Editor: Steve Lilley
steve.k.lilley@nasa.gov

Developed by: ARES Corporation

Thanks to Mr. Leslie Kagey, PE for his insightful peer review.

This is an internal NASA safety awareness training document based on information available in the public domain. The findings, proximate causes, and contributing factors identified in this case study do not necessarily represent those of the Agency. Sections of this case study were derived from multiple sources listed under References. *Any misrepresentation or improper use of source material is unintentional.*

Visit http://pbma.nasa.gov to read this and other case studies online or to subscribe to the Monthly Safety e-Message.